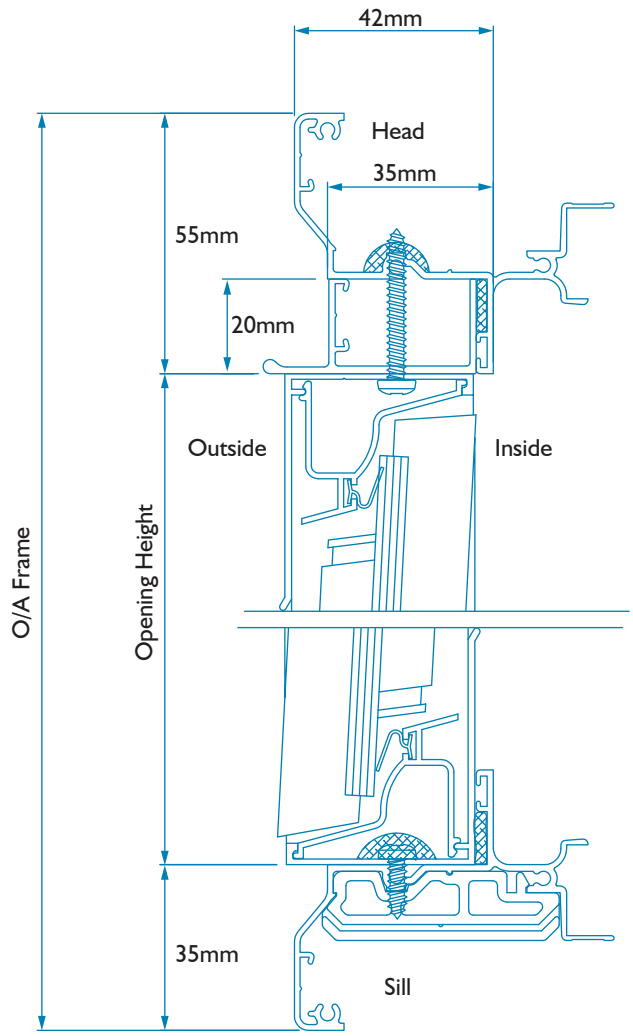
42mm
Head
35mm
55mm
20mm
Outside
Inside
O/A Frame
Opening Height
35mm
Sill

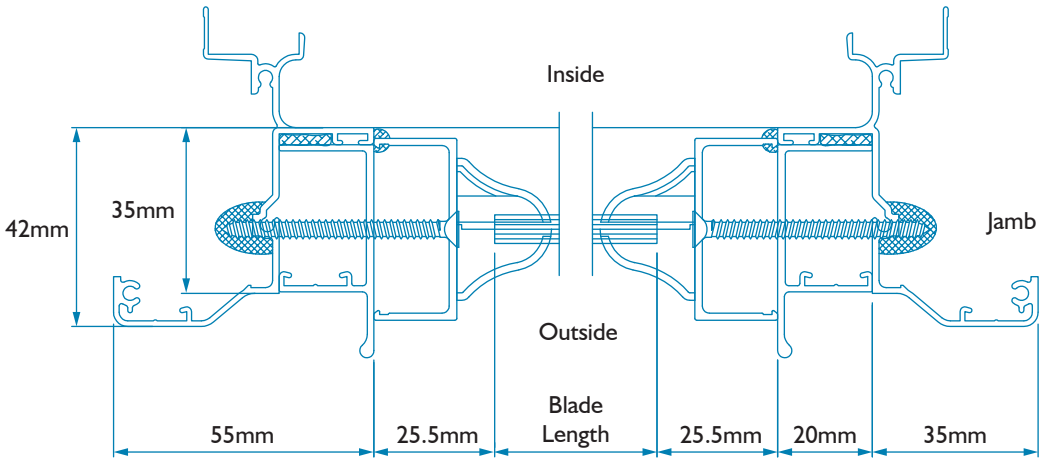
Inside
42mm
35mm
Jamb
Outside
Blade
Length
55mm
25.5mm
25.5mm
20mm
35mm