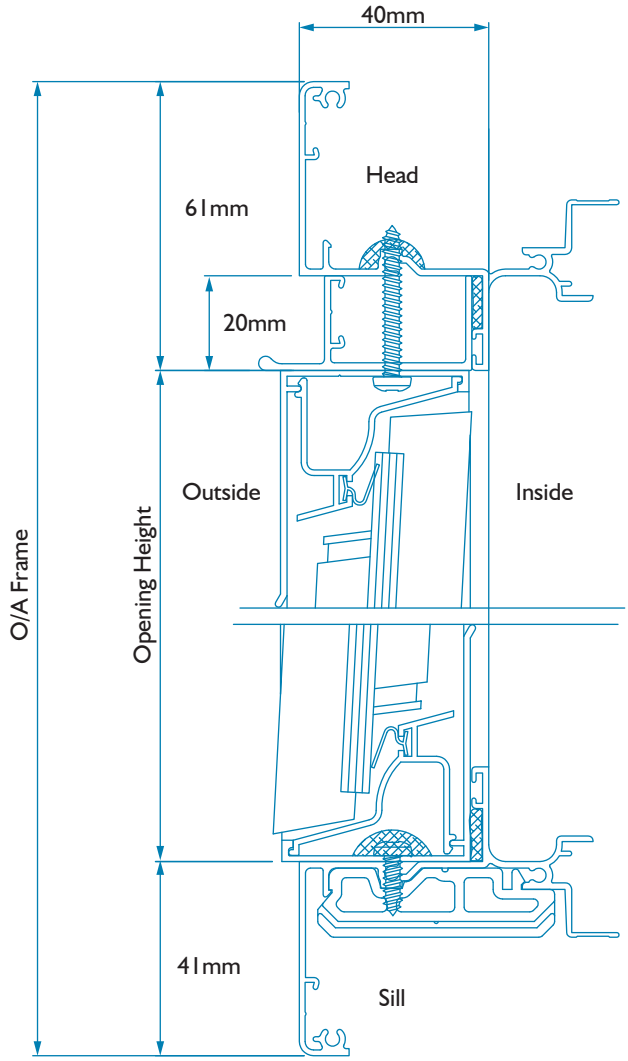
40mm
Head
61mm
20mm
Outside
Inside
O/A Frame
Opening Height
41mm
Sill

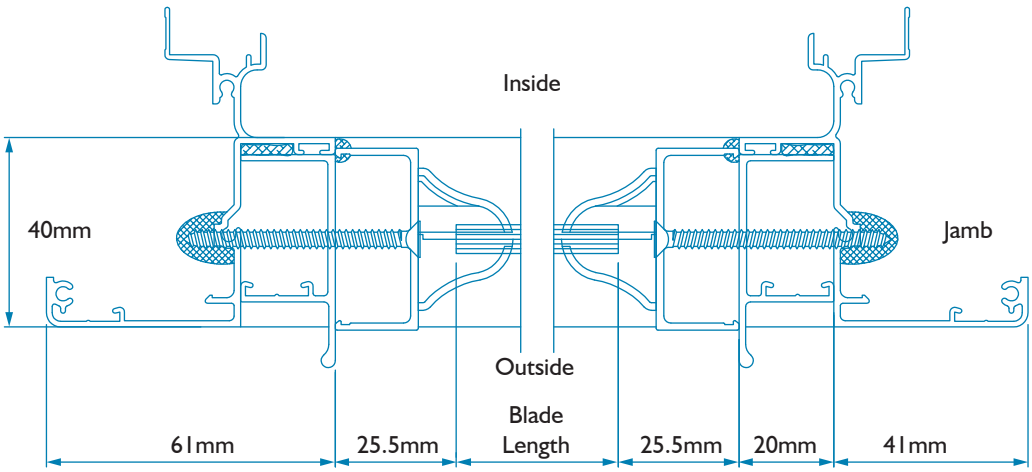
Inside
40mm
Jamb
Outside
Blade
Length
61mm
25.5mm
25.5mm
20mm
41mm