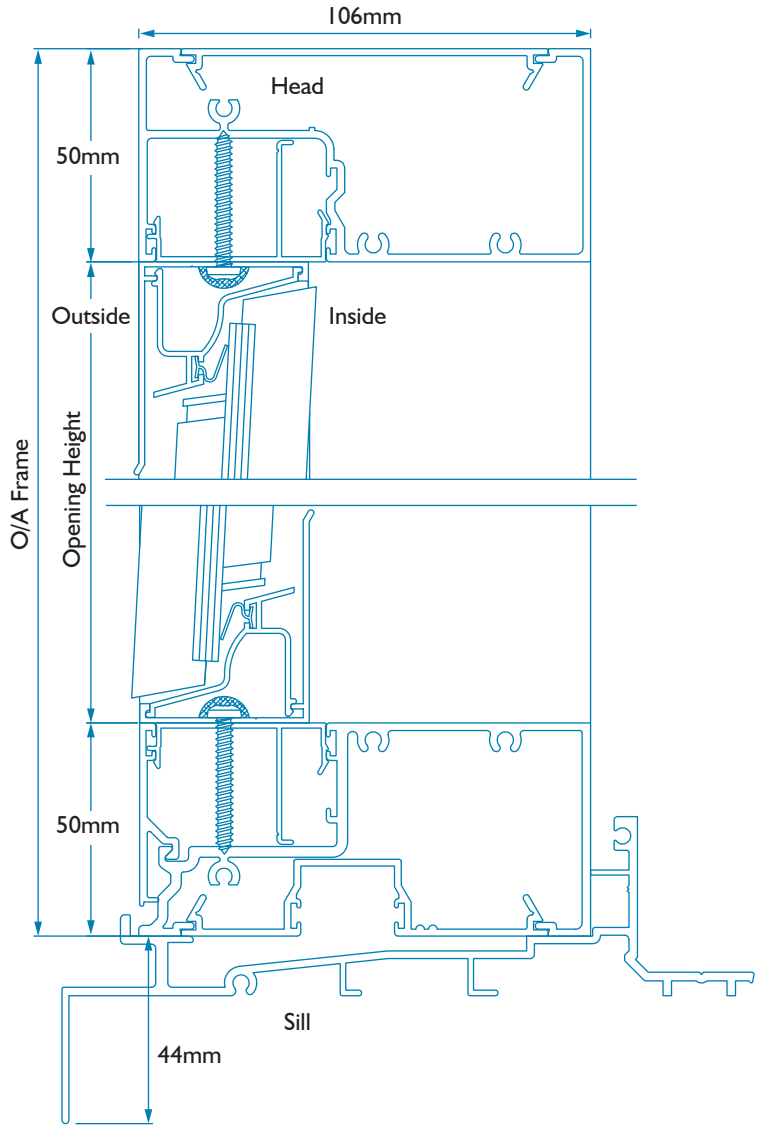
106mm
Head
50mm
Outside
Inside
O/A Frame
Opening Height
50mm
Sill
44mm

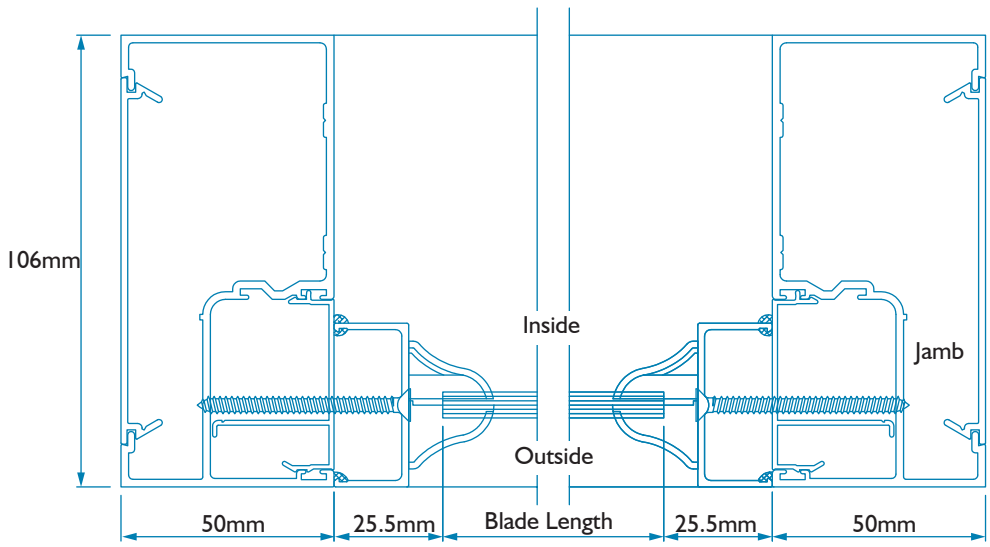
106mm
Inside
Jamb
Outside
50mm
25.5mm
Blade Length
25.5mm
50mm