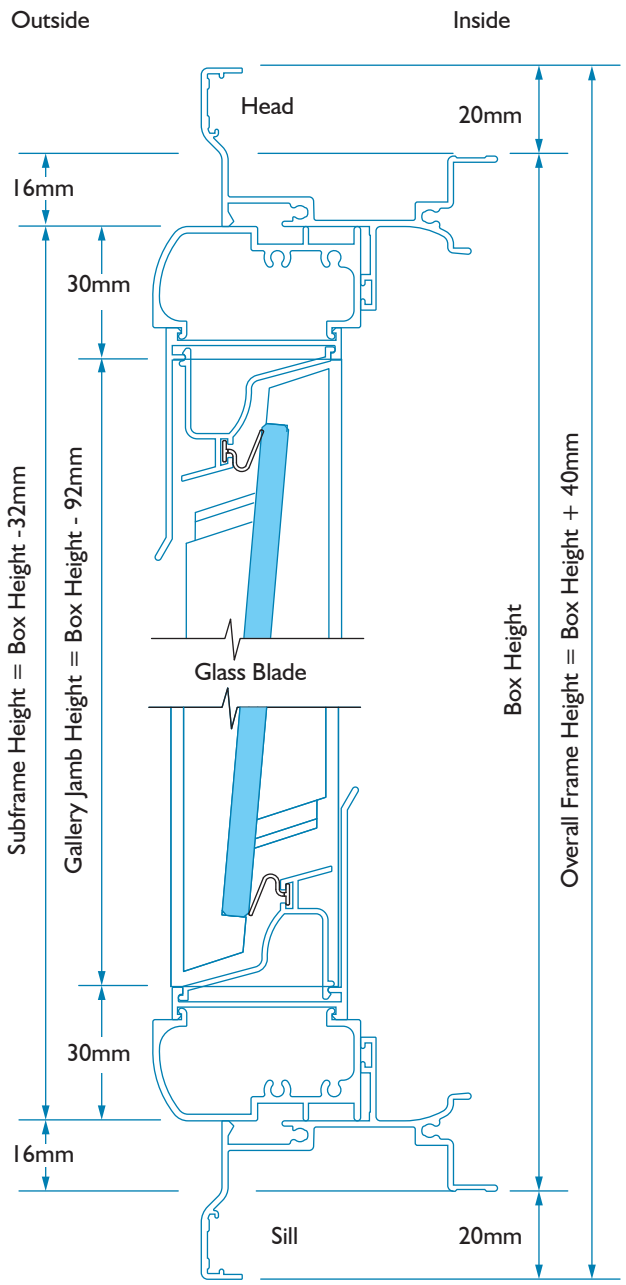
Outside
Inside
Head
20mm
16mm
30mm
Subframe Height = Box Height -32mm
Gallery Jamb Height = Box Height - 92mm
Box Height
Overall Frame Height = Box Height + 40mm
Glass Blade
30mm
16mm
Sill
20mm

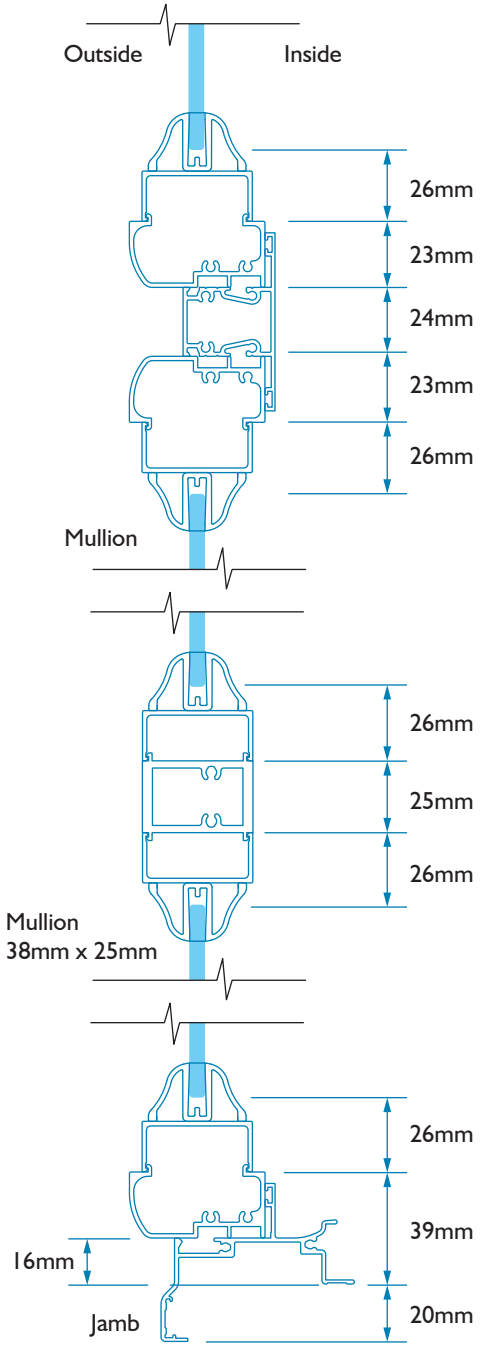
Outside
Inside
26mm
23mm
24mm
23mm
26mm
Mullion
26mm
25mm
26mm
Mullion
38mm x 25mm
26mm
39mm
16mm
20mm
Jamb